Trike Conversion Installation Guide

for

Harley-Davidson® FLH Series Motorcycles 2009 & Up Independent Suspension

Revision 10

CAUTION: Champion's independent suspension was designed to enhance your riding comfort and performance. However, to achieve maximum results adjustments must be made for individual riding styles, passenger weight and whether they are traveling with a trailer.

Failure to make the proper adjustment will potentially lead to serious personal injury and/or property damage and may void the warranty.

Champion does not guarantee fit form or function to any of their trike kits if altered or aftermarket components were added to the original bike design.

All dealers or installers should make proper adjustments with the customer before delivery. Champion is not responsible for additional adjustments made under warranty.

Champion Motorcycle Accessories International, Inc.
dba Champion Sidecars
11841 Monarch Street, CA 92841
(800) 875-0949 (714) 847-0949 Fax (714) 847-1539
www.championtrikes.com

Champion Trikes

Trike Conversion Kit for

2009 & Up

Harley-Davidson® FLH Series Motorcycles

Independent Suspension

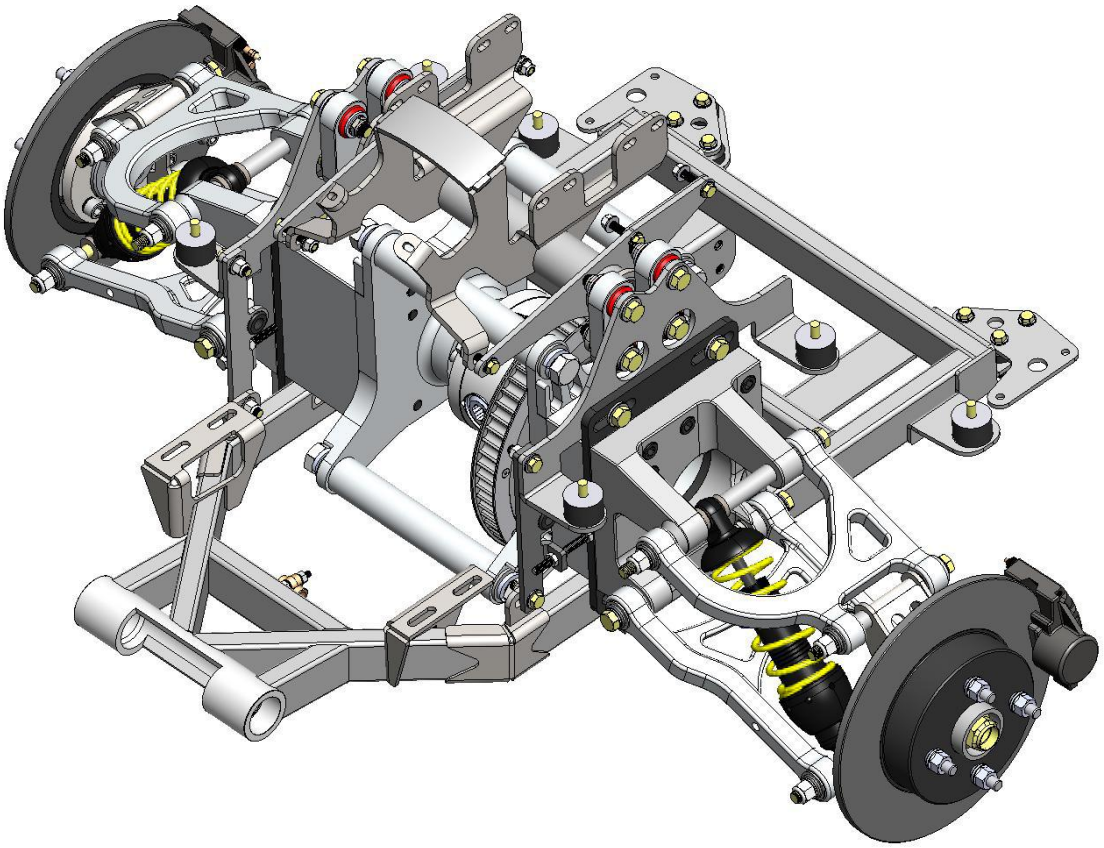

Figure 1

Table of Contents

1. General Information

The Champion Sidecars Trike Conversion Kit is designed with the utmost consideration for safety, quality and ease of installation. The kit comes complete with all necessary hardware and fasteners. However, it is assumed that the installer has advanced/professional skills in motorcycle servicing. It is recommended that installer obtain an OEM service manual for the vehicle on which the Trike kit is to be installed. In addition the Champion Independent was designed to enhance your riding performance and comfort. The Independent must be adjusted per the individual riding style. Please review the installation instructions before installing the kit.

1.1 Installation Information

The information contained in this Installation Guide is intended for use by technicians of advanced to professional skill levels. Attempting installation without the proper training, tools and equipment could cause injury to you or others. It could also damage the vehicle or cause an unsafe condition.

1.2 Replacement Suggestions

a. If there is more than 12,000 miles on the motorcycle, we recommend installing a new drive belt when performing a trike conversion.

b. If there is more than 12,000 miles on the motorcycle, we recommend installing new pivot shaft rubber mounts when performing a trike conversion. Harley recommends to inspect the engine mounts and stabilizers every 10,000 miles.

c. We recommend that after 500 miles the trike should be returned to the dealer for inspection.

1.3 “Lowered Bikes”

CAUTION: Champion's FLH trike kits are designed for installation on motorcycles that have not been "lowered." If the Champion kit is installed on a lowered bike, the rear wheels are likely to rub on the underside of the trike body.

Champion does not guarantee fit form or function to any of their trike kits if altered or aftermarket components were added to the original bike design.

1.4 For Your Safety

Because this guide in intended for technicians of advanced to professional skill levels, we do not provide warnings about many basic shop safety practices. If you have not received shop safety training or do not feel confident about your knowledge of safety practices, we recommend that you do not attempt to perform the procedures described in this guide.

Some of the most important general safety precautions are given below. Champion Sidecars cannot warn you of every conceivable hazard that can arise. Only you can decide whether or not you should perform a given task.

1.5 Important Safety Precautions

a. Make sure you have a clear understanding of all basic shop safety practices and that you wear appropriate clothing and use safety equipment. Be especially careful of the following:

- Read all directions before you begin, and make sure you have the tools, the parts and the skills required to perform the tasks safely and completely.

- Protect your eyes by using proper safety glasses, goggles or face shields anytime you hammer, drill, grind, pry or work around pressurized air or liquids, and springs or other stored-energy components.
- Use other protective wear when necessary, for example gloves or safety shoes. Handling hot or sharp parts can cause severe burns or cuts.
- Protect yourself and others when you have a vehicle up in the air. Anytime you lift a vehicle, either by hoist or a jack, make sure that it is securely supported.

b. Make sure the engine is turned off and battery disconnected before you begin work.

- Carbon Monoxide poisoning from exhaust gases: Be sure there is adequate ventilation whenever you run the engine.
- Burns from hot parts: Let the engine and exhaust system cool before working on those areas.
- Injury from moving parts: If running the engine, keep hands, fingers and clothing away from moving/rotating parts.

c. Gasoline vapor and hydrogen gases from batteries are explosive. To reduce the possibility of fire or explosion, be careful when working near gasoline and batteries.

d. Use only nonflammable solvent, not gasoline, to clean parts.

e. Never drain or store gasoline in an open container.

f. Keep all cigarettes, sparks or flame away from the battery and all fuel related parts.

1.6 Specifications

Overall Length:	103”
Overall Width:	57.5”
Wheel Base:	72”
Max Load Capacity:	600 Lb Max
Tire Size (15”):	205 / 70 / R15
Wheel Size (15”) (4 lug)	Offset +35 mm 15x7JJ 4 on 4.5
Tire Pressure:	24-26 PSI
Suspension:	Double A-arm Independent
Rear Differential:	Custom-built rear differential utilizing OEM drive belt.
Brakes:	Original front plus 2 high performance disc brakes at rear.
Storage Capacity:	5.75 cubic feet. Two full-face helmets and additional storage.

*Champion does not change certain components that will affect EPA, CARB, or any laws that will change the emission characteristics of the motorcycle.

2. Removal of Original Parts and Independent Rear End Disassembly

Secure and raise motorcycle 9 to 10 inches using a quality motorcycle lift.

Remove the following from the vehicle. See OEM manual for detailed instructions. Items to be retained for re-installation after modification are noted.

- Seat - to be re-installed; without modification.
- Left and right side covers - to be re-installed after modification.
- Tour Box - to be re-installed without modification (if so equipped).
- Left and right saddle bags (if so equipped).
- Left and right rear crash bars, saddlebag rails (if so equipped).
- Tour Box mounting frame (if so equipped).
- Left and right passenger foot rests - to be re-installed without modification.
- Left and right mufflers
- Rear wheel
  NOTE: Prior to removing rear wheel, depress foot brake and secure in down position (e.g., zip-tie to floor board). This will prevent fluid flow when rear brake Caliper is removed.
- Remove Rear Caliper (disconnect brake line at Caliper).
  NOTE: Cap line to prevent introduction of dust / debris into line. Remove Caliper.
- Rear Fender
- Swing Arm (Bearings and Pivot Shaft Spacers to be used later)
- Disassemble Rear End Assembly as Shown (remove swing arm, top frame and rear frame)

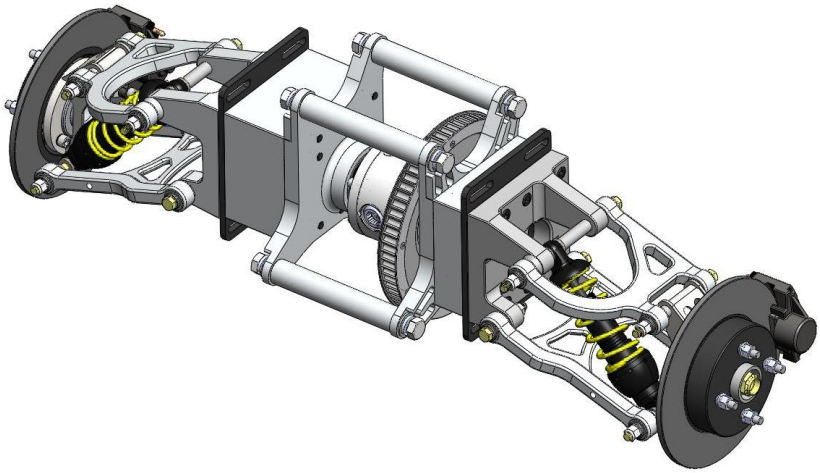

Figure 2

3. Installation of Trike Conversion Kit

3.1 Remove Pivot Assemblies from OEM Swing Arm.

a. See OEM manual for pivot assembly removal instructions, noting use of HD special tools. Keep the bearings - to be installed later.

b. Modify Outer Spacers by machining or drilling outer spacers to match large (¾") bore as shown. Ensure spacers slide freely over full length of pivot shaft. See Figures 3 and 4

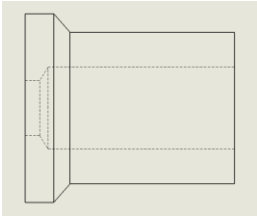

Figure 4

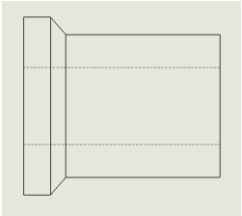

Figure 3

3.2 Reinstalling OEM Pivot Assembly to Vehicle.

a. Install OEM pivot bearings into Swing Arm, from outside, inwards.

b. Install inner spacer to Swing Arm, from outside, inwards (opposite of OEM installation).

c. Install modified outer spacer to Swing Arm, from inside, outwards (opposite of OEM installation). See Figure 5

3.3 Installing Champion Swing Arm to Vehicle (All Models)

a. Coat OE pivot shaft with ANTI-SEIZE.

b. Position Champion Swing Arm to rear of transmission.

c. Install pivot shaft through swing-arm, transmission and left and right side rubber mounts.

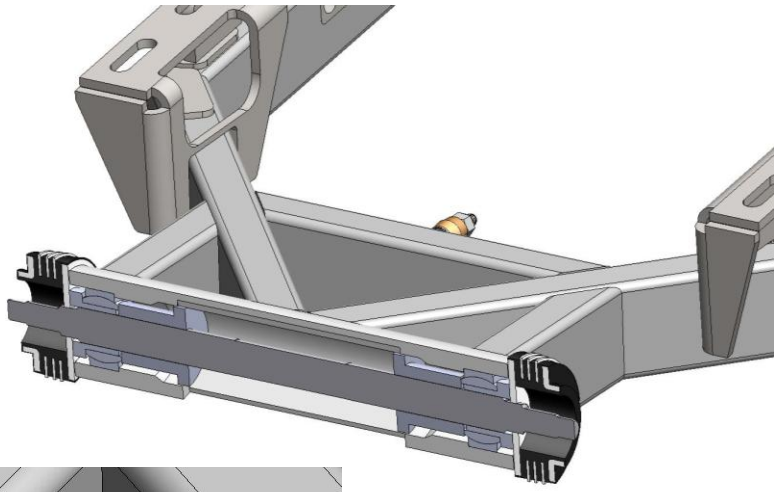

Figure 5
Sectional view of
Pivot Shaft Assembly

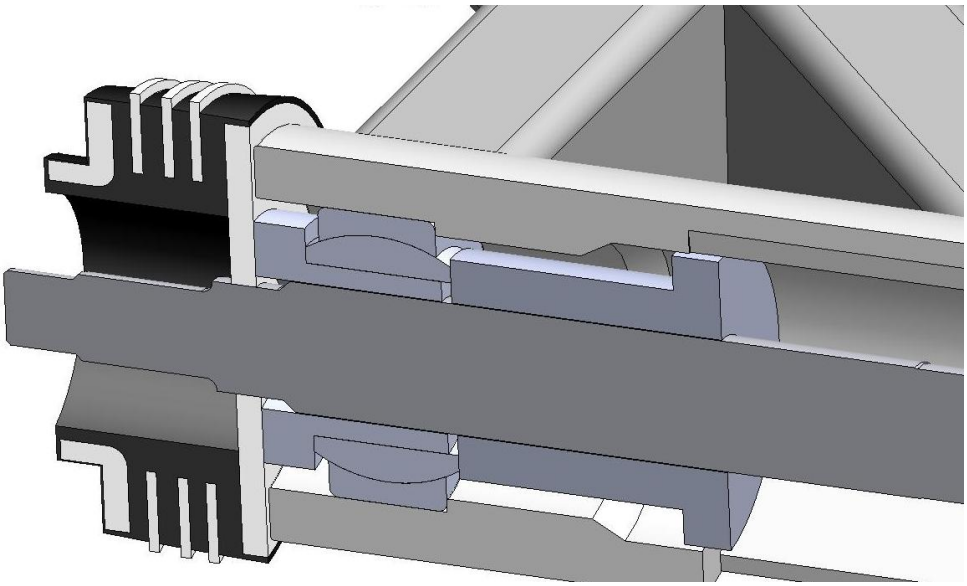

Figure 5
Close up Sectional view of
Pivot Shaft Assembly

3.4 Positioning Rear End Assembly

a. Remove the 2 rear connector tubes and the one front top connector tube and position drive belt onto the rear pulley. See Figure 6

b. Passing the left end through the drive belt, position the unit behind vehicle. Use suitable support to help stabilize the unit. See Figure 7

c. Reinstall the 3 connector tubes. Apply 2-3 drops of oil to the connector tube bolts, install and torque to 150 ft-lb.

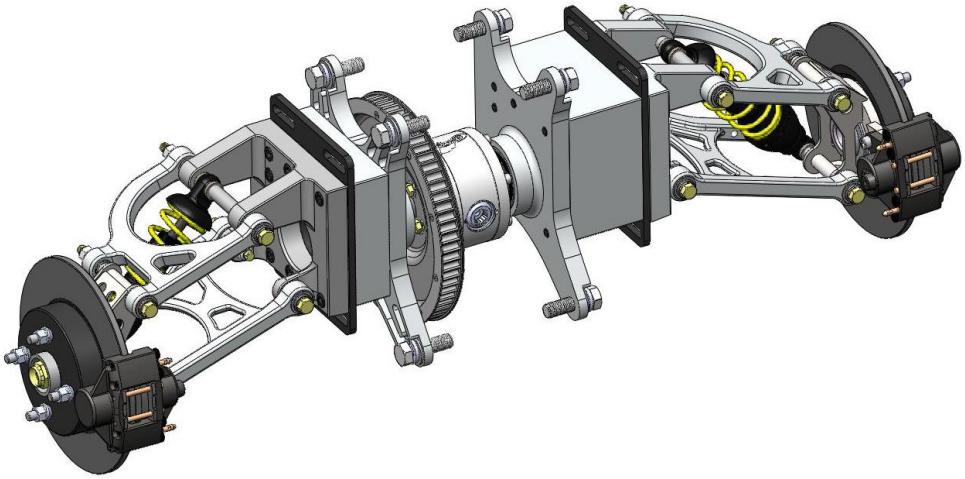

Figure 6 Rear View

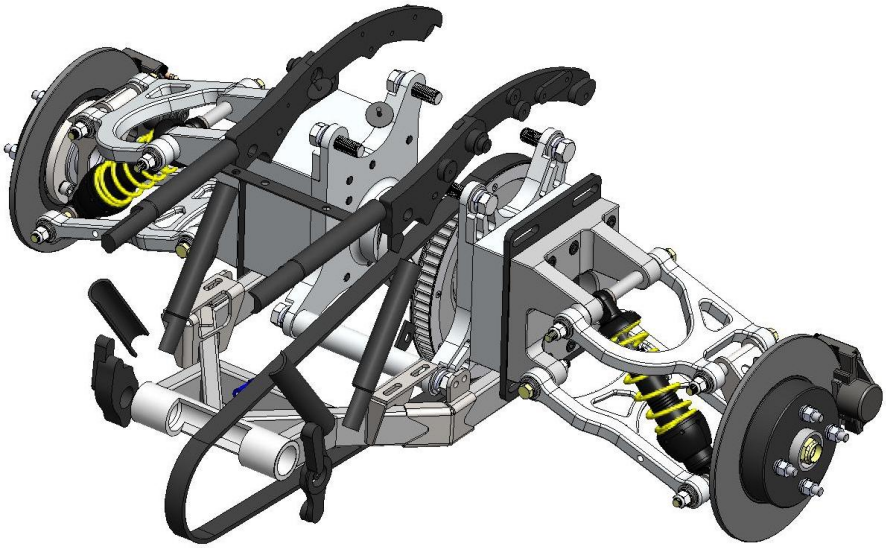

Figure 7

3.5 Install Top Frame / Seat Mount

a. Install the Top Frame/Seat Mount as shown using the supplied hardware. See **Figure 8.** Torque hardware to 20 ft-lb.

12	HW-312-017	5/16 flat washer
6	HW-312-009	5/16-18 nylock nut
6	HW-312-002	5/16-18x1-3/4 hhcs gr8

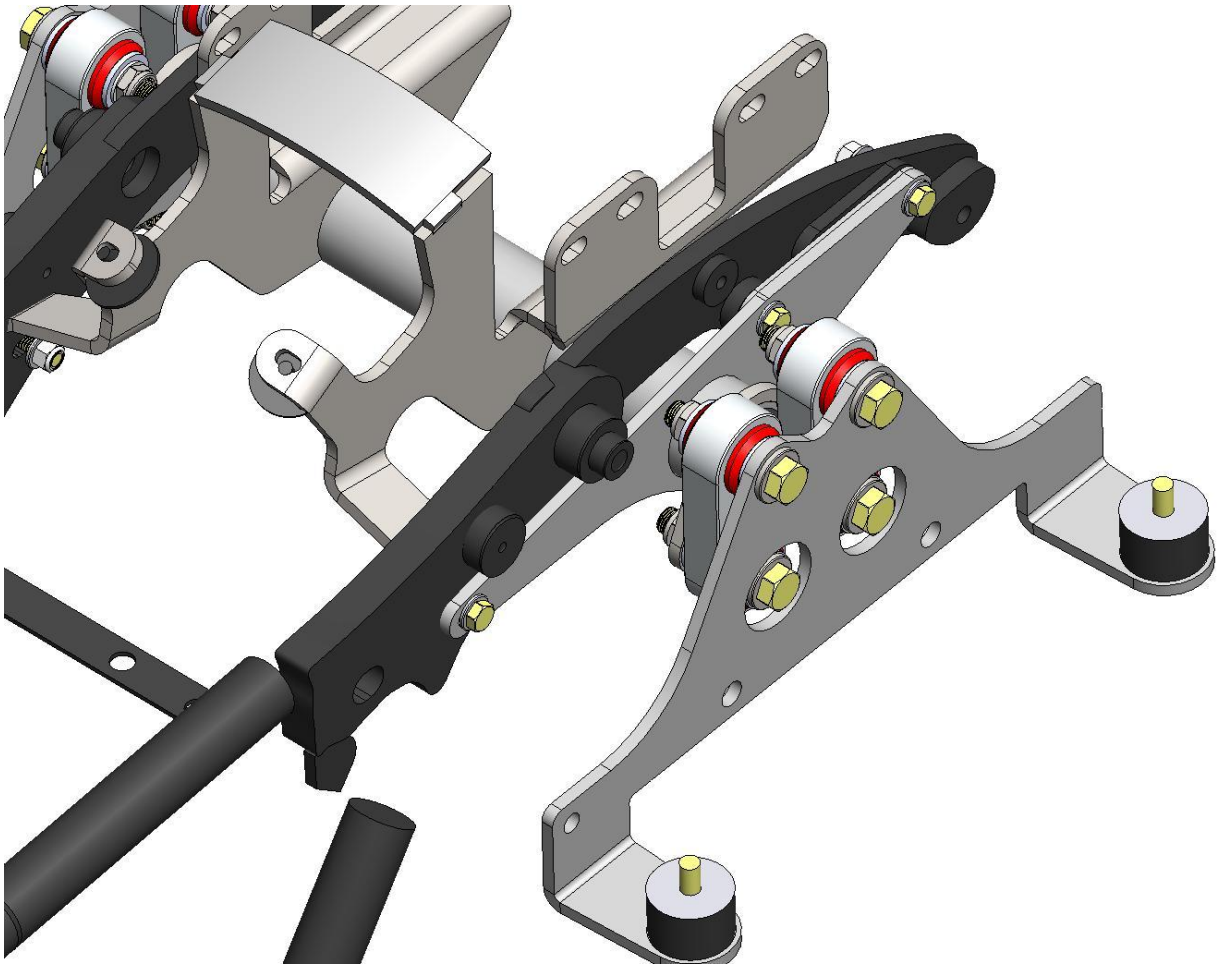

Figure 8

3.6 Installing Rear End Assembly

a. Raise unit to Top Frame and install 1/2-13x1-1/2" bolts, washers and nylock nuts. Snug the bolts, these will need to be loosened for rocker alignment done later. See **Figure 9, 10, and 11**

b. Reinstall Swing Arm and Body Mount Frame to unit using hardware removed. Install bolts and leave loose for belt adjustment later. (Note: 2009 and up HD models use Swing Arm part # SU-F01-006)

NOTE: USE REAR HOLES ON THE SWING ARM FOR ALL 2009 UP APPLICATIONS. Figure 10

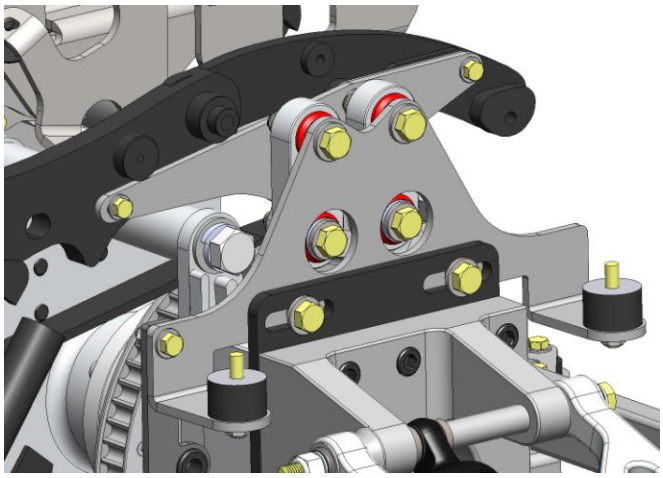

Figure 9

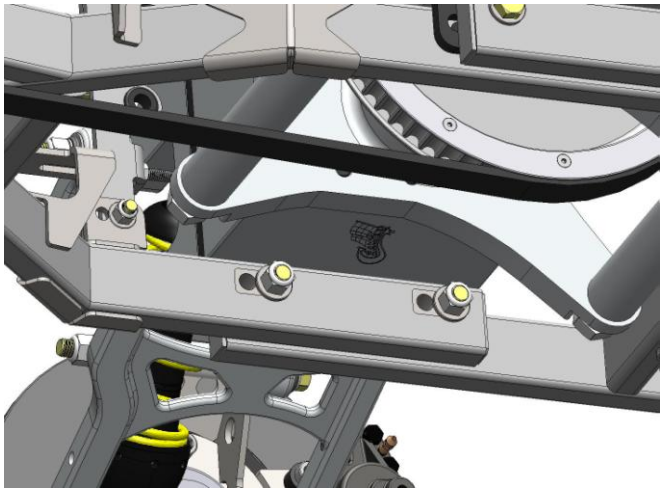

Figure 10

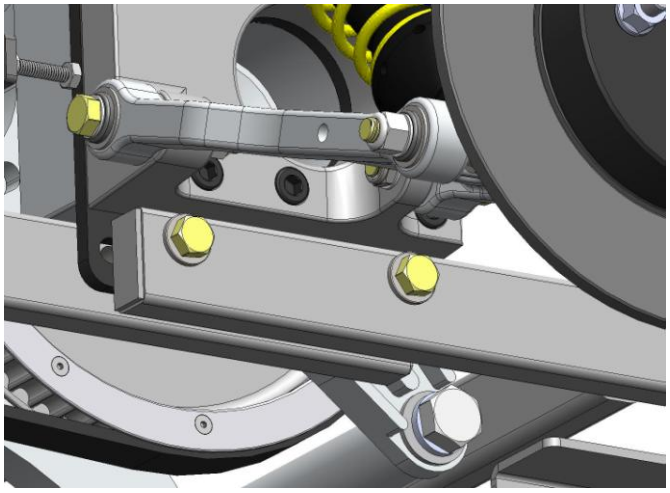

Figure 11

c. Install belt adjuster brackets using 3/8-16x1-1/4" bolts, washers, and nylock nuts. See **Figure 12**

d. Torque belt adjuster bracket hardware to 30 ft-lb.

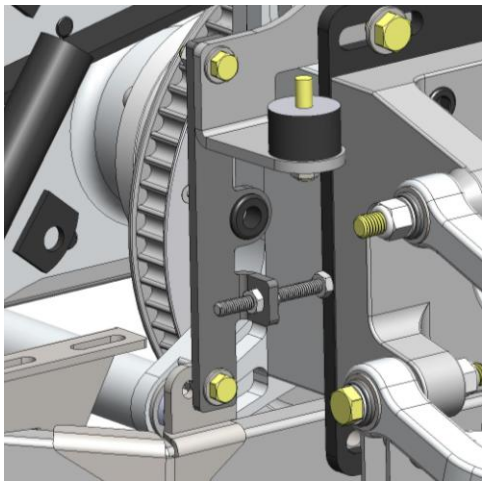

Figure 12

3.7 Aligning and Tensioning Belt

The slots in the Control Arm Mount Plate allow for approximately 1-3/4" fore and aft movement of the unit to allow for belt tensioning and alignment.

a. Loosen 1/2" bolts in Swing arm enough to allow movement of unit.

b. Set belt tension and alignment by moving independent drive train unit forward or rearward as necessary using adjuster bolts. **Figure 12.** Belt tension can be measured by total vertical movement and should be approximately ¾"-1" with a new belt or 1" to 1-1/2" with a used belt. Remember, TOTAL vertical movement.

TIP: Measure from the bracket to the face of the drive train on each side to get the alignment close. Then perform the next step.

c. To check the alignment, turn the sprocket by hand, noting whether the belt runs in the center of the pulley. If the pulley runs on the right side plate of the pulley, use the right hand adjuster bolts to move the right wheel rearward until the belt runs in the center. If the belt runs on the left side plate of the pulley, use the left adjuster bolts to move the left wheel rearward. Make small adjustments and recheck the alignment.

d. Torque Front 1/2" fasteners ONLY securing unit to 50 ft-lb and double check belt alignment. If alignment is off, please return to 3.7c. If alignment is correct, torque rear 1/2" fasteners to 50 ft-lb.

e. Recheck belt tension and alignment after torquing fasteners.

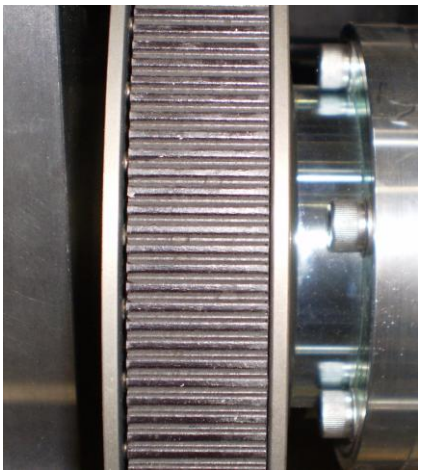

Belt off to the right side.

Figure 13

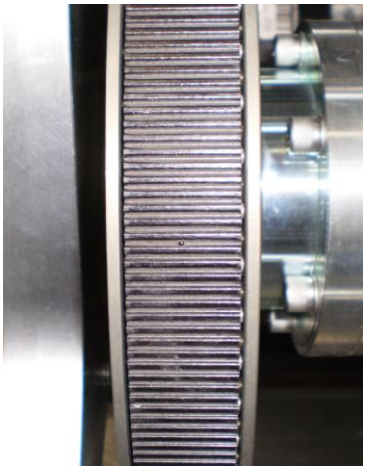

Belt centered correctly.

Figure 14

3.8 Rockers and Top Mount Adjustment

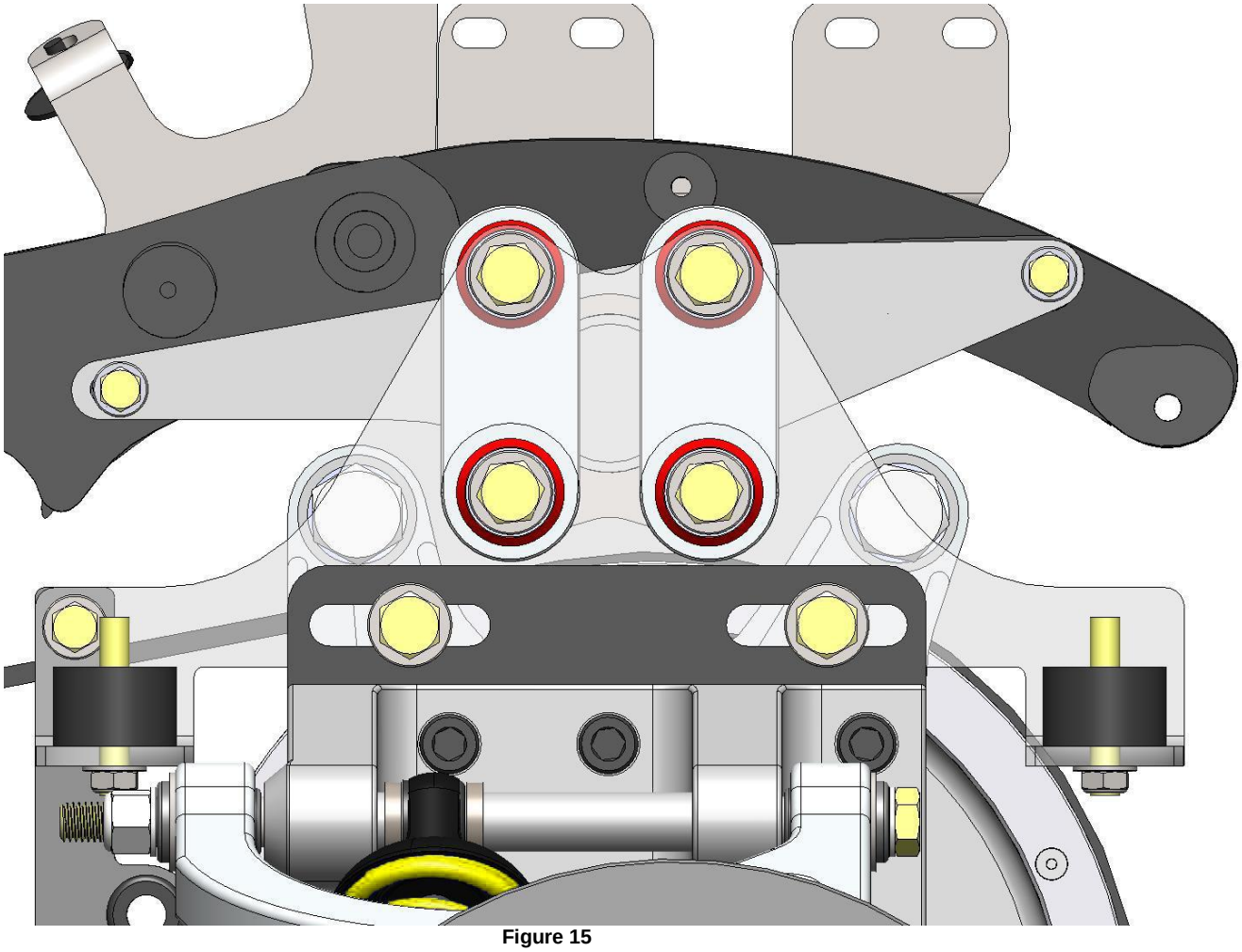

Figure 15

a. Prior to Torquing down the top 1/2" bolts, ensure that vibration rockers are close to vertical (+ or - a few degrees is not a problem) as shown in Figure 15.

b. If the rockers are as shown above, torque down the 1/2" bolts to 50 ft-lbs. Proceed to Anti-roll Bar installation.

c. If the rockers are not close to vertical, loosen the belt tensioner plate 2x 3/8" bolts.

d. Adjust the top plate front to rear so that the rockers are vertical or close to vertical as shown above.

e. Torque down the 1/2" bolts to 50 ft-lbs.

f. Torque down the belt tensioner plate 2x 3/8" bolts to 30 ft-lb.

3.9 Install Anti-roll bar

3.9.1 Standard Anti-roll Bar

Note: You may have a clearance issue with the Anti-roll bar housing and Factory Harley chassis tab. Trim Tab as necessary. Figure 18

a. Install 3/8-24x1.25 bolts, washers and nuts through Anti-roll bar housing onto front frame. Position the anti-roll bar on the frame so that the rod ends will be about vertical when attached to the control arms. Torque to 30 ft-lb. **Figure 16**.

b. Attach rod-end onto right control arm with 3/8-24 bolt, washer, bearing (rod-end), washer, control arm, washer and nut. See **Figure 17**.

c. Adjust rod-end in or out on left side to allow left side bolt to insert freely.

d. Tighten jam nut

e. Insert bolt, washer, bearing (rod-end), washer, control arm, washer and nut.

f. Torque to 30 ft-lb.

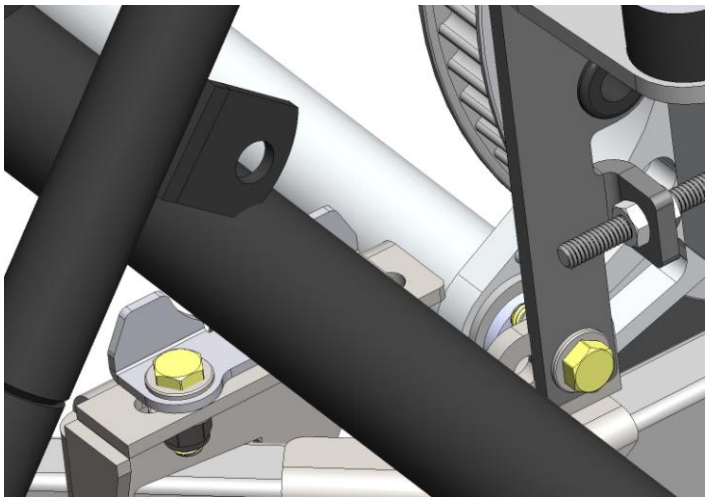

Figure 16

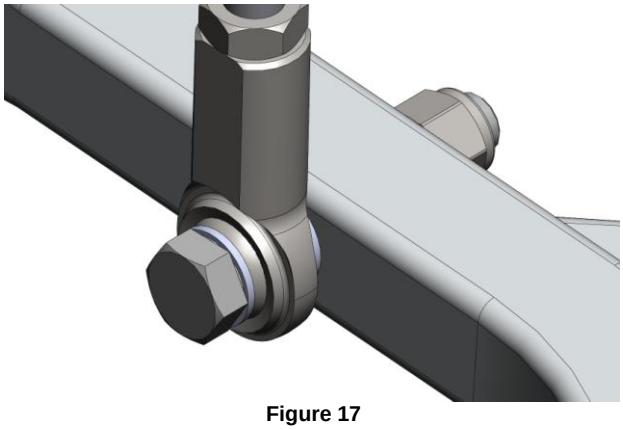

Figure 17

3.9.2 Variable Sway Bar (VSC) Option

a. See VSC Installation Instruction Supplemental

3.10 Install Brake Lines

a. Connect Blue Brake Pressure Residual Valve to T-Block using a crush washer in between. Torque down to 17 to 19 Foot Pounds.

b. Connect OEM brake line from rear master cylinder to Brake Pressure Residual Valve using 10mm single banjo bolt and two crush washers. Torque down to 17 to 19 Foot Pounds. **Figure 18**.

c. Using brake fluid specified on the master cylinder, bleed rear brake system.

d. Thoroughly bleed system using the *upper* bleeders on Rear Brake Calipers.

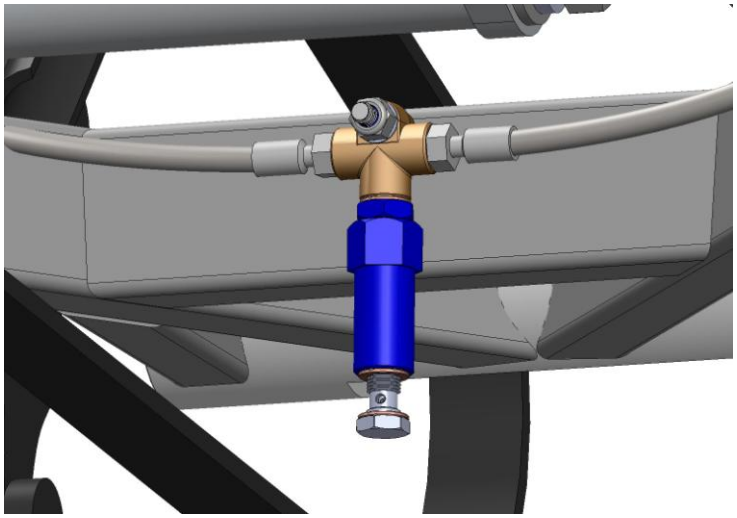

Figure 18

3.11 Install Mufflers

a. Prior to installing mufflers, 2” must be cut from left OEM header pipe and 3-1/4" must be cut from right OEM header pipe.

b. Locate Champion muffler extensions of Trike kit and remove 1-1/4” from the left side extension at the rear.

c. Locate right side OEM heat shield and remove 2” at the rear.

d. Install extensions to header pipes.

e. Install muffler brackets to body mount frame using hardware in supplied kit. Note orientation in illustration. **Figure 19.**

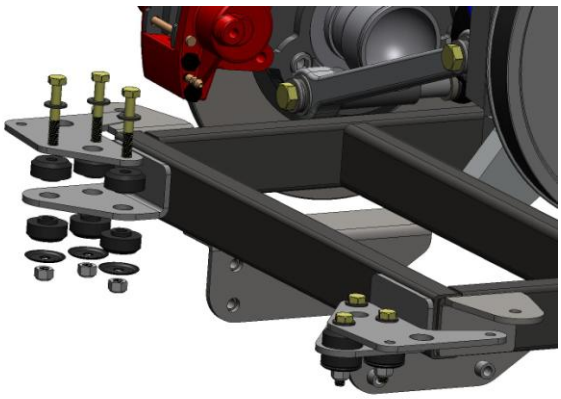

Figure 19

Note: Tighten nuts until two threads of the bolts are visible. Do not over tighten hardware.

f. Install mufflers to extensions using OEM clamps. Ensure proper alignment of exhaust components. Secure mufflers to muffler brackets using supplied hardware. **Figure 20.**

g. Tighten exhaust clamps.

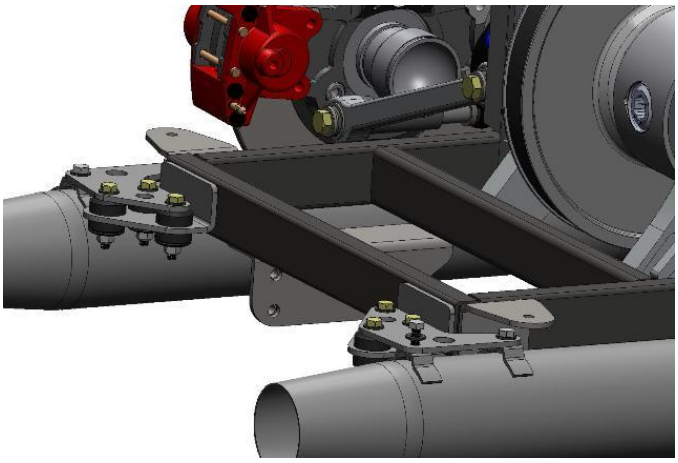

Figure 20

Figure 21

3.12 Install Trike Body

Note: The installation/alignment of the body is an iterative process to find the correct position of body in relation to the wheels. The six holes already in the body are primarily for shipping purposes. These holes might line up with the pre-drilled body frame holes when the body is fitted. Follow instructions below to re-drill holes if required.

a. Remove the two rear vibration mounts that are attached to the rear frame.

b. Place trike body onto body frame and position using the front four holes. Install the fender washers and hand tighten the four 3/8-16 short nylock nuts.

c. Locate the two rear holes in the rear frame and ensure correct alignment. Drill open if necessary.

d. Insert two rear vibration body mounts with washer and nut on bottom.

e. Tighten all six 3/8-16 short nylock nuts to 20 ft. lbs.

f. Connect trike wire loom to OEM tail light harness connector. Do not connect blue wire (single wire) to accessory.

g. Install wheels and torque to 75 ft. lbs.

h. Tire pressure needs to be 24-26 psi.

3.13 Modify Side Covers

a. Both left and right side covers will need to be trimmed to fit around the Front Frame Brackets and Anti-roll Bar.

3.14 Install Tour Box / Frame (touring model)

a. Install tour box frame to seat / upper mount using the supplied hardware. **Figure 22.**

Qty per side	Description
8	3/8-24x1-1/4 GR8 hex head bolt
16	3/8 SAE flat washer
8	3/8-24 NyLock nuts

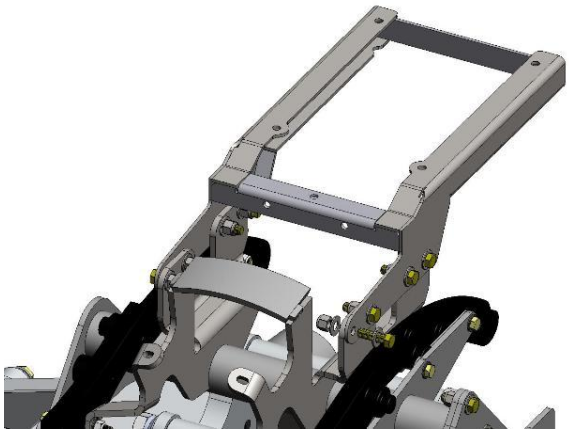

Figure 22

- Install tour box using the supplied four ¼-20x7/8" HHCS and washers. Do not install the inner liner at this time. **Figure 23.**

- Route the trunk release cable from the front of the body up through the right side grommet hole. Install the trunk **release** cable bracket to the right rear corner inside of the top box using OEM hardware. See **Figure 24**.

- With the knob of the cable removed, lay in the top box liner. Mark the location of the cable and remove the liner. Drill a 9/16" hole for the cable to pass through and reinstall the liner. See **Figure 25**. Reinstall the cable knob.

Figure 23

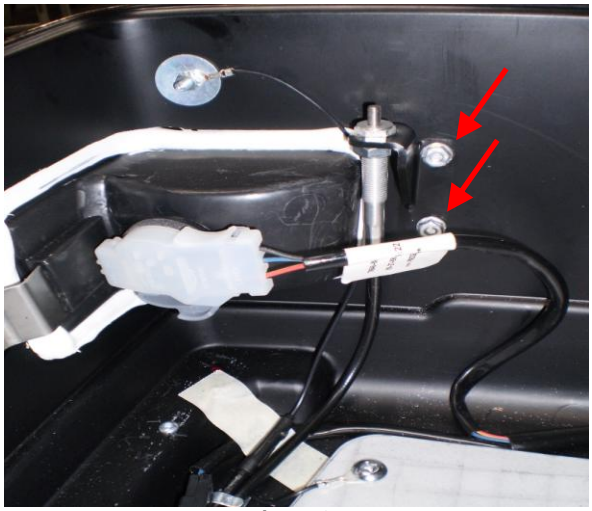

Figure 24

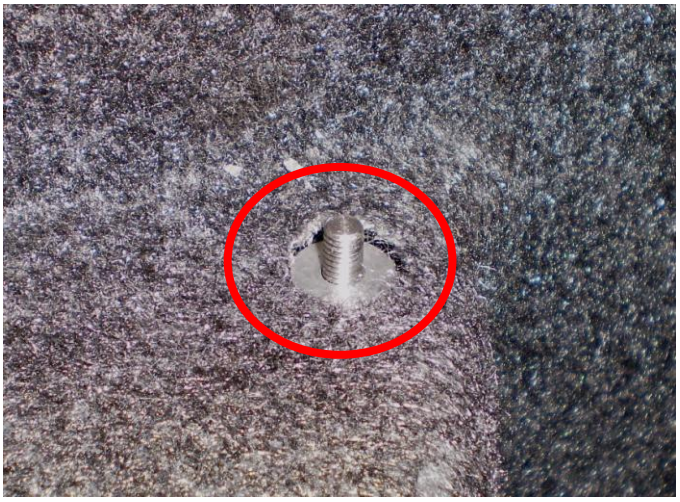

Figure 25

3.15 “Bagger” Antenna Replacement

For models with radios and no tour box, a dipole antenna replacement, model BT87, **Figure 26,** is available from Biketronics Inc. and can be mounted inside fairing or other desire location.
See www.biketronics.com.

Figure 26

3.16 Install Seat Rear Mount Bracket (non touring models)

a. Install Seat Rear Mount Bracket using the supplied hardware. **Figure 27**

Qty per side	Description
4	3/8-24x1-1/4 GR8 hex head bolt
8	3/8 SAE flat washer
4	3/8-24 NyLock nuts

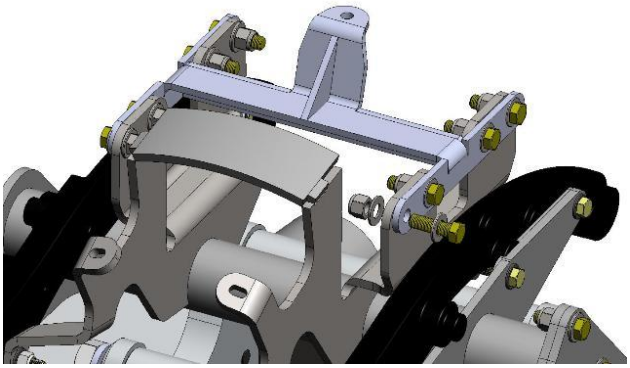

Figure 27

3.17 Back Rest Mounts (non touring models)

a. If installing passenger back rest, the supplied mounting plates should be installed with the Seat Rear Mount Bracket.

3.18 Install Seat

a. Remove the stud plate from the OEM rear fender. **Figure 28.**

b. Carefully remove the studs from the stud plate ensuring not to damage or bend the plate.

c. Cut off the bent end (harness guide) of the stud plate. **Figure 29.**

d. Install the supplied clinch studs as shown. When pressing in the studs make sure not to bend or distort the stud plate.

e. Install modified stud plate to the seat/shock mount frame using the OEM plastic retainers. **Figure 30.**

f. Install grab rail as normal using OEM hardware.

g. Install seats as normal using OEM hardware.

Figure 28

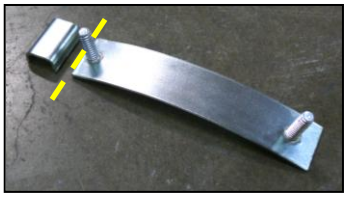

Figure 29

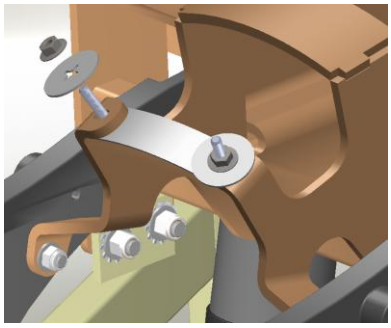

Figure 30

3.19 Install Trailer Hitch Receiver (optional)

a. Install hitch receiver to body frame with supplied eight 5/16"-18 x 1" L Hex Bolts and 5/16" SAE Flat Washers. **Figure 31.**

b. Electrical connectors not supplied. Mounting tab for connector socket is located on hitch receiver.

c. Color code for wiring as follows: (Confirm by testing)

Function	Color
Running lights	BROWN
Brake lights	RED
Turn signal, right	GREEN
Turn signal, left	YELLOW
Accessory	BLUE
Ground	BLACK

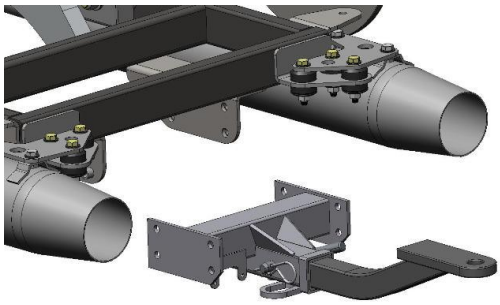

Figure 31

4. Shock Adjustment

4.1 Adjusting Shock Preload

a. The preload adjuster is factory-set at the softest level for a plush ride. Increasing preload may be advisable if need be for additional weight.

b. To adjust the preload, turn by hand the black collar located on the bottom of the spring just as you would with a fastener with right handed thread.

NOTE:

Both Shock Absorbers must be adjusted equally resulting in the equal spring preload. Not having equal adjustments will affect handling that could to lead to potential harm.

More Preload = Stiffer Less Preload = Softer

NOTE:

Recommended spring preload as follows:

- + 1/4" up to 200 lbs.
- + 1/2" up to 400 lbs.
- + 5/8" with trailer

Champion recommends using a shortened #2 Phillips head screwdriver to adjust spring preload. Tool tip diameter needs to be ¼".